Design And Development Of Carpet Looms

S.K. Saha, Rajendra Prasad[1], Shreepad Sarange[1] and Namish Shukla[1]

Deptt. of Mech. Engg.
I.I.T. Delhi, Hauz Khas, New Delhi-110016
saha@mech.iitd.ernet.in

[1]Center for Rural Development and Technology
I.I.T. Delhi, Hauz Khas, New Delhi-110016

ABSTRACT

India produces a large variety of carpets in terms of quality, size, and raw material. At present, carpets are woven on wooden looms, which have several drawbacks, like susceptibility to termites, low life (2-3 years), loss of environment friendly trees, etc. Moreover, it is very difficult to provide tension to the warp, as it requires 4 to 5 persons and about 30-40 minutes. The tension is given by pulling a rope tied with a metal rod on the upper and lower beams. The present work deals with the design and development of a carpet loom, which can overcome all the above problems faced due to the wooden structure. Metallic channels and beams are used. Field trials indicate that the designed metallic looms in which one person can easily give tension in about 10 min are very much acceptable to the users. Moreover, beam bending is also very small, providing uniform tension that improves the quality of carpets.

INTRODUCTION

Carpet looms are used for weaving carpets. During weaving different operations are carried out, such as tensioning of warp, shading, knotting, cutting, and beating. For these operations, some arrangements should be provided. While designing the loom structure, its strength, ease of operation, high productivity, ergonomics and cost should be considered so that they add maximum value for money. Carpet weaving is the process of interlacement of warp and weft in a fabric according to the graphic design [1]. Here warp means longitudinal threads that run parallel to vertical channel whereas, and weft means transverse thread that run across the fabric, as shown in Fig. 1.

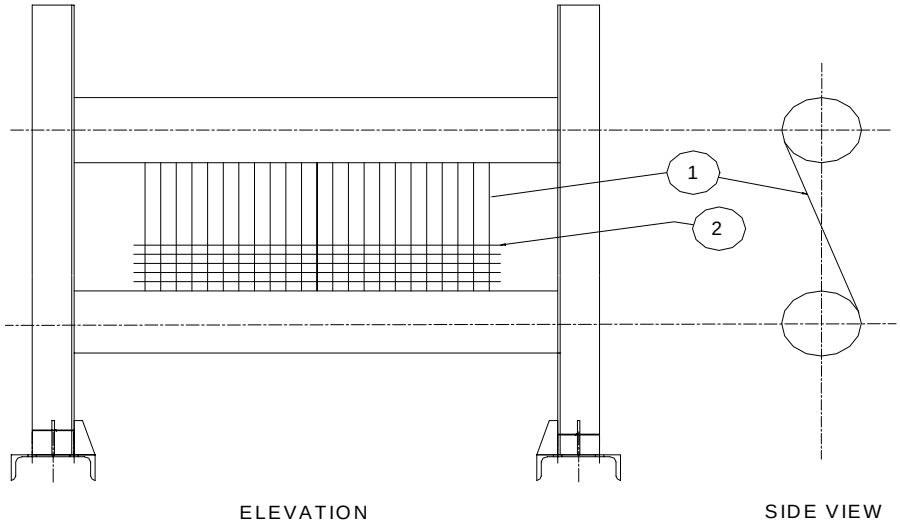

1) Warp 2) Weft

Fig. 1. Carpet weaving arrangement.

Fig. 2. Wooden carpet loom.

At present, wooden carpet looms are used by the craftsmen, as shown in Fig. 2., which have several drawbacks e.g.,

- Wooden structure is susceptible to termites;
- Life is less (2-3 years);
- Due to high tension, bending occurs in the beams;
- Difficult to provide tension to the warp. (4 to 5 persons and about 30 to 40 minutes);
- Some times upper beam falls during weaving. Due to high tension sometimes upper beam falls, which injures the artisans.

However, before designing, a new loom it is necessary to understand the carpet weaving process. It involves a preparatory process where
Warp preparation is done by packing it in various forms. It is wound on the beams and then stretched tightly. This is called Beaming. A hand woven carpet consists of warp and weft thread interlacing at right angles in which additional short lengths or tuft of pile yarn are tied in or knotted, row by row as weaving proceeds. The free ends of pile yarn are arranged closely together and stand almost up right to form a compact pile surface. Knots are pulled tight and yarn ends are cut to the required length. Warp is generally of wool, cotton or silk. It is piled together by twisting to right or left or s-twist. Weft is visible on the surface of the carpet. Weft fixes the rows of knot inserted around the warp strand thus holds them firmly.
A design, as shown in Fig. 3 has been done to eliminate the above mentioned drawbacks. A good number of newly developed looms are now operating in places like Bhadohi, Mirzapur, Agra, Jaipur, Valsad and Srinagar. The new loom has following components as shown in Fig. 3.

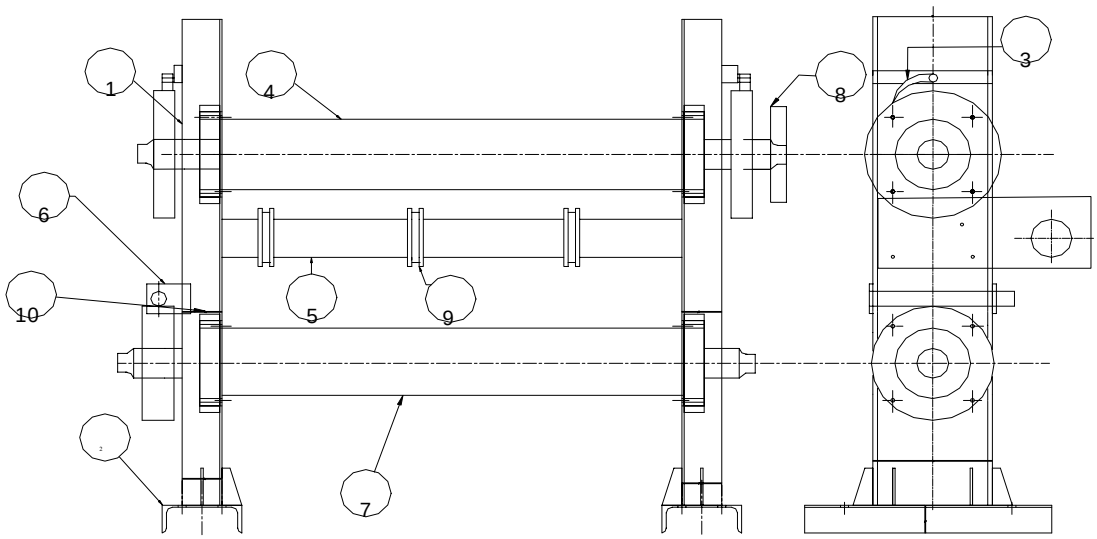

(a)

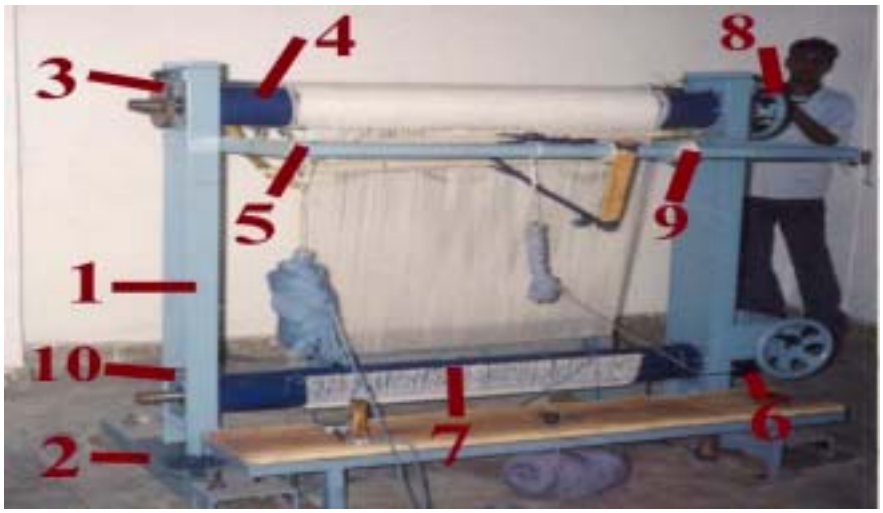

(b)

1) Support channel; 2) Base channel 3) Ratchet;
4) Upper beam; 5) Shedding pipe; 6) Tensioning device;
7) Lower beam; 8) Handle; 9) Shedding roller;
10) Bush bearing.

Fig. 3. Improved design.

DESIGN METHODOLOGY

First, the requirements are listed below as

A. Required tension in the warp is about 300 KN;
B. Easy tensioning;
C. Locking device for the lower and upper beams;
D. Simplified shedding.

Next, the steps to achieve the above requirements.

A. Required tension.

The pressure exerted by the warp on the beam depends on the quality i.e. the knot per square inch and the type of warp used.
There are essentially two ways in which the yarns are characterized as to their strength behavior. These are:

1. Lea or skein test-including the ballistic test [2].
2. Single thread test.

While tests in items1 require expensive equipment the single thread test can be conducted easily, by just hanging known loads on thread and getting its break point. Based on our test the finest quality of warp could withstand a load of 100 N and multiplying with total number of warp (3000), we get the required tension on the warp around 300KN.

B. Easy tensioning device.

It is necessary to ease the tensioning. At present it is done through pulling a rope attached to the upper beam by two persons this requires about 30-40 minutes. It was planned to have one person to tensioning after several brainstorming sessions, worm and worm wheel arrangement, which has self locking property was chosen as the tensioning device. The device is attached at the lower beam. The new device allows tensioning by one person in 5 to 10 minutes.

C. Locking devices.

Lower beam is locked in tensioned position due to self-locking property of the worm and worm wheel attached to it. The upper beam uses ratchet and pawl to stop rotation in the tensioned condition.

D. Simplified shedding.

Rollers are introduced on the shedding bars for easy change of position of the shedding arms as indicated in Fig. 3.

LOOM DESIGN

The design of the carpet looms are based on the following assumptions:

1. Beams are considered simply supported;
2. The beam is slender, which means that it is at least five times as long as its width or depth;
3. There is a plane of symmetry that runs through the entire length of the member, and all external load lies in this plane;
4. The beam is prismatic, which means that cross section is invariant through the length of beam;
5. The beam is to be constructed of a material with a linear stress-strain constrictive relation;
6. The geometry of the beam is such that there is no chance of sideways buckling.

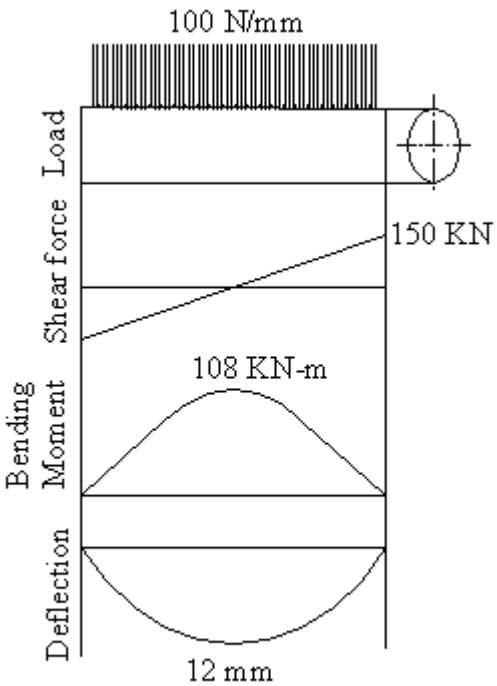

Fig. 4 Beam loads

Beams

The load on the beams and the associated shear force, bending moment and the deflection diagrams are shown in Fig. 4.
Maximum central deflection was obtained as 12 mm, which was acceptable.
The beam size is obtained based on maximum bending moment and torsion, which is Length: 3000, Outer Diameter: 220mm, Inner Diameter 208mm.

Side Support Channels

As both beams are resting on the two side support channels, the load exerted by the warp is to be borne by the channels. Considering buckling failure, the crippling load is found using Euler's formula [3].

$$P_{cr} = \frac{\pi^2 E I}{Le^2}$$

The sizes are obtained as 300mm×100mm×11.6mm.
Using ISLC 300.

Bush bearing

Both beams are going to rest on the bush bearings on the support channel. These bearings facilitate the smooth rotation of the beams. Taking material for bush bearings as CI, which has self-lubricating properties.
Based on bearings contact stress, the sizes obtained, Width and height = 250mm, Length and thickness = 50mm.
Similarly other component like worm and worm gear, ratchet and pawl are designed.

CONCLUSIONS

Based on the design proposed several versions (about 10) were fabricated and field-tested in the areas of Bhadohi, Mirzapur, Jaipur, Agra, Valsad and Srinagar. At present at least 80 looms are in these places to make carpets of 5×4 feet, 6×9feet, 9×12 feet sizes. Training to the artisans is also underway. The feedbacks propose the acceptance of the developed loom.

ACKNOWLEDGEMENTS

The present development was possible due to the financial assistance from DC (Handicrafts), Ministry of textiles, Govt. of India, during 1999-2002.
Mr.Pankaj Dorlikar, Mr.Rameshwar K., Mr.Umesh H., who have done the initial work towards the development of this machine. Sincere thanks are also due to Mr. Sharad, Mr. Mahipal, Mr. Ashok, Mr. Dhiraj, (manufacturing project staff) without whose help different versions of this machine could not have been possible.

REFERENCES

[1] Robinson George, 1972, “Carpets and other textile floor coverings,” Textile Book, Service London, Second Edition.
[2] F.L. Scardino, 1977 “Textile Yarns” John Wiley & Sons, New York.
[3] Norton Robert L., 1996, “ Machine Design”, Prentice-Hall, New Delhi.
[4] “PSG DATA BOOK” PSG College of Engg., Coimbatore.